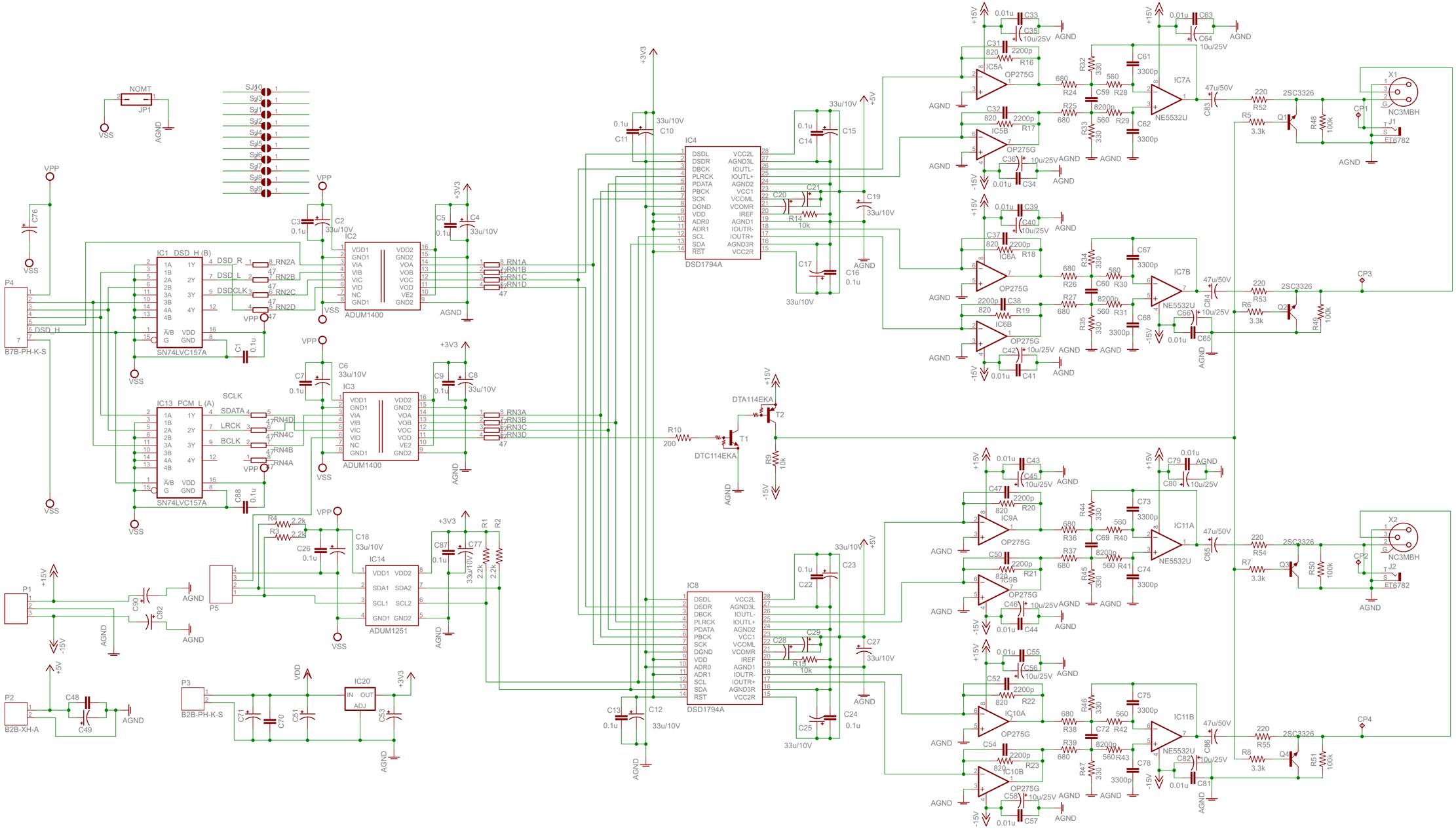
IC1 DSD_H (B)
SN74LVC157A
IC13 PCM_L (A)
SN74LVC157A
IC2
IC3
ADUM1400
IC14
ADUM1251
IC4
DSD1794A
IC8
DSD1794A
IC5A
IC5B
IC6A
IC6B
IC7A
IC7B
IC9A
IC9B
IC10A
IC10B
IC11A
IC11B
OP275G
NE5532U
IC20
DTA114EKA
DTC114EKA
B7B-PH-K-S
B2B-PH-K-S
B2B-XH-A
NC3MBH
ET6782
2SC3326
DSD_R
DSD_L
DSDCLK
DSD_H
SCLK
SDATA
LRCK
BCLK
VPP
VSS
AGND
+3V3
+5V
+15V
-15V