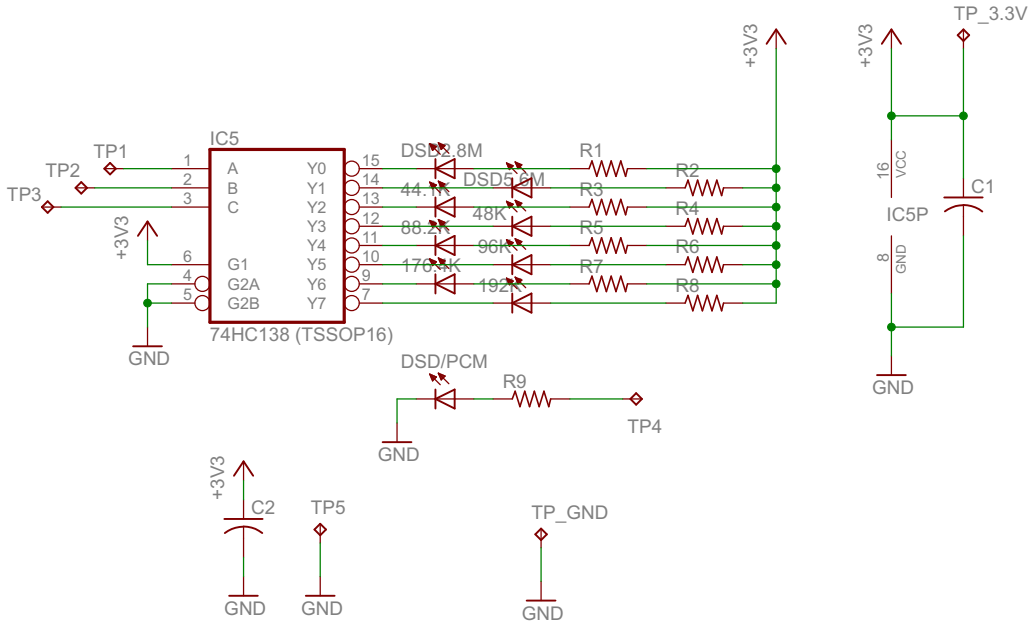
IC5
TP1
TP2
TP3
+3V3
GND
A
B
C
G1
G2A
G2B
Y0
Y1
Y2
Y3
Y4
Y5
Y6
Y7
74HC138 (TSSOP16)
DSD2.8M
DSD5.6M
44.1K
48K
88.2K
96K
176.4K
192K
R1
R2
R3
R4
R5
R6
R7
R8
DSD/PCM
R9
TP4
C2
TP5
TP_GND
TP_3.3V
VCC
IC5P
C1