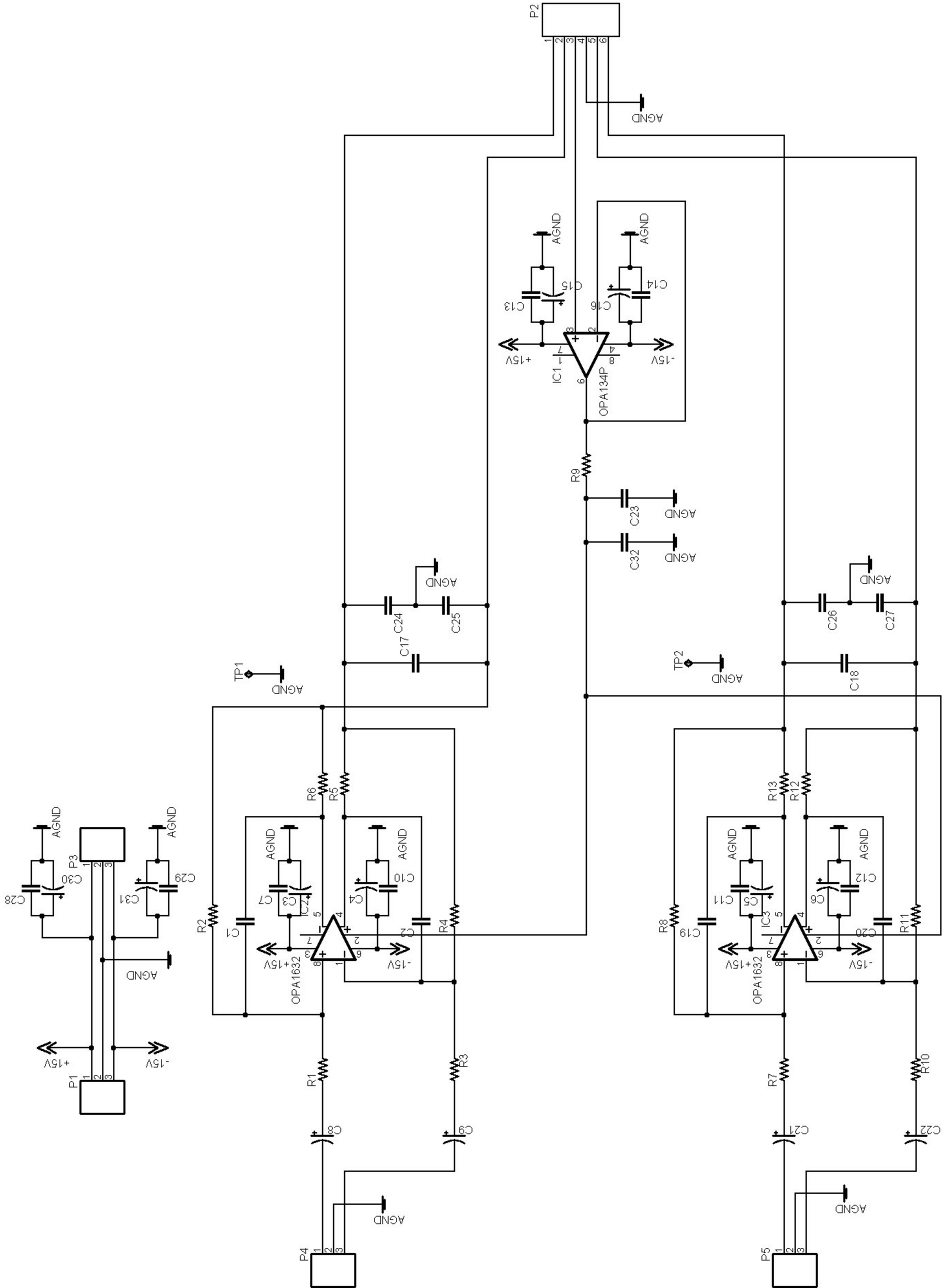
P2
AGND
IC1
OPA134P
+15V
-15V
C13
C15
C14
C16
R9
C23
C32
C24
C25
C17
TP1
C26
C27
C18
TP2
R6
R5
R13
R12
IC2
OPA1632
IC3
C7
C3
C4
C10
C5
C6
C11
C12
C1
C2
C19
C20
R2
R4
R8
R11
R1
R3
R7
R10
C8
C9
C21
C22
P4
P5
P1
P3
C28
C30
C31
C29